TAOS
by Mario Ruiz

SIDE TABLE SQUARE ALUMINUM 18”

864101

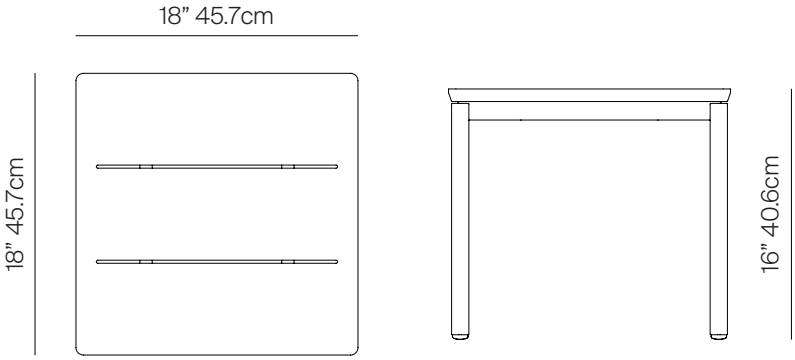

SPECIFICATIONS

Width:	18”	45.7 cm
Depth:	18”	45.7 cm
Height:	16”	40.6

MATERIALS

Frame: Marine Grade Powder coated aluminum.
Table top: Powder coated aluminum.

Furniture Cover Available.

FINISHES

SPACE GREY -52 | JAVA -51 | TERRA -78 | MARINA -77 | MUSCADE -51

SAGE -76 | SHELL -45 | WHITE -53

ALUMINUM

DANAO

danaoliving.com

SIDE TABLE SQUARE ALUMINUM 18”

864101

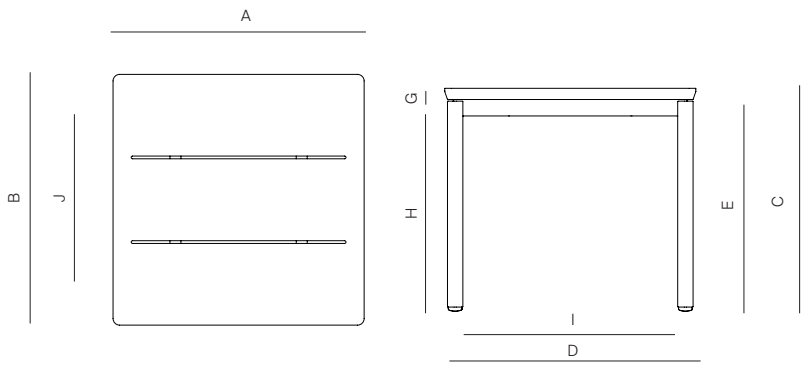

MEASURES INCH CM	OVERALL LENGTH	OVERALL WIDTH	OVERALL HEIGHT	SIZE OF BASE	FOOT HEIGHT	OVERGANG AT ENDS	TABLE TOP THICKNESS	APRON TO FLOOR CLEARANCE	SPACE BETWEEN LEGS AT HEAD	SPACE BETWEEN LEGS AT SIDE	SEAT UP TO (APROX. 20”W CHAIRS SPACED 2” APART)
DESCRIPTION	A	B	C	D	E	F	G	H	I	J	K
SIDE TABLE SQUARE ALUMINUM 18”	18	18	16	16	16	-	6 1/2	14	15 1/2	15 1/2	-
SKU#	45.7	45.7	40.6	40.6	40.6	-	16.3	40.6	39.1	39.1	-

MEASURES INCH CM	DIAGONAL	CLEARANCE	OVERALL FURNITURE WEIGHT LBS KGS	TOTAL PIECES IN A BOX	BOXED WEIGHT LBS KGS	CBM
DESCRIPTION	L					
SIDE TABLE SQUARE ALUMINUM 18”	23 3/4		14	1	20	5
SKU#	60.4		6	1	9	