MONTAUK

by Mario Ruiz

CHAISE ALUMINIUM

062.2901

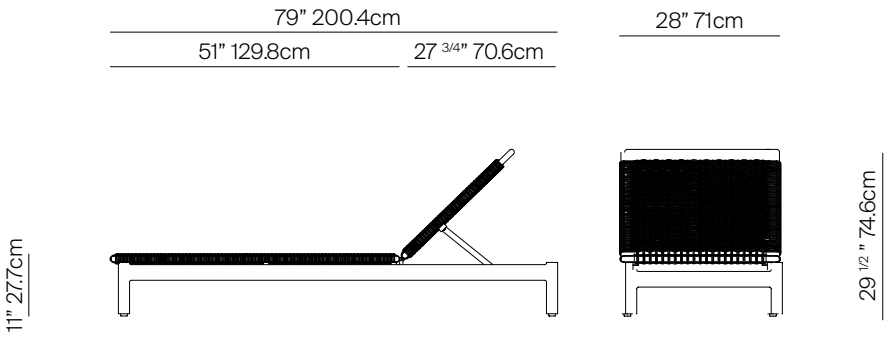

SPECIFICATIONS

Width:	28”	71 cm
Depth:	79”	200.4 cm
Height:	29 1/2”	74.6 cm
Seat height:	11”	27.7 cm
Seat height *with optional cushion	13 1/2”	343.7 cm

FINISHES

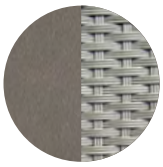

MUSCADE -51

BRUNIA -22

FRAME/ WEAVE

MATERIALS

Frame: Marine Grade Powder coated aluminum frame.

Weave: Synthetic all-weather weave.

Optional cushion available.

Furniture cover available.

TRHOW PILLOWS SOLD SEPARATELY

DANAO

danaoliving.com

MONTAUK by Mario Ruiz

CHAISE ALUMINIUM

062.2901

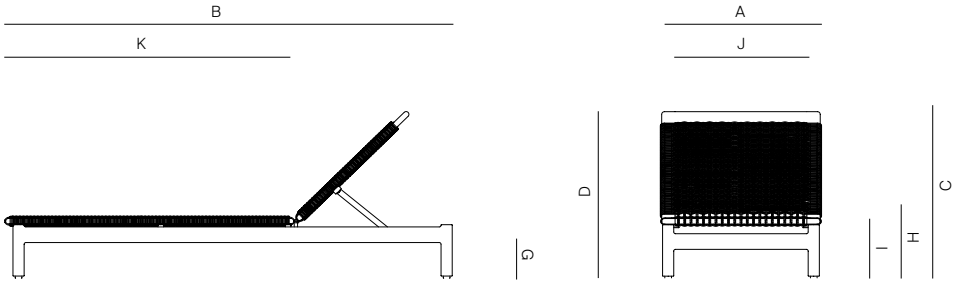

MEASURES INCH CM	OVERALL WIDTH	OVERALL DEPTH	OVERALL HEIGHT WITH CUSHIONS	OVERALL FRAME HEIGHT	ARM HEIGHT	ARM WIDTH	FOOT HEIGHT	SEAT HEIGHT WITH CUSHIONS	FRAME SEAT HEIGHT (FLOOR TO FRAME)	INSIDE SEAT WIDTH	INSIDE SEAT DEPTH
DESCRIPTION	A	B	C	D	E	F	G	H	I	J	K
CHAISE ALUMINIUM	28	79	30 1/2	29 1/2	-	-	6 1/4	13 1/2	11	23 1/4	51
SKU# 062.2901	71	200.4	77.5	74.6	-	-	16	34.2	27.7	59	129.8

MEASURES INCH CM	# OF BACK CUSHIONS	# OF SEAT CUSHIONS	COM YARDS METERS	DIAGONAL CLEARANCE	FURNITURE WEIGHT LBS KGS	TOTAL PIECES IN A BOX	BOXED WEIGHT LBS KGS	CUBE
DESCRIPTION								
CHAISE ALUMINIUM	-	-	-	39 3/4	46.94	1	122.03	8.34
SKU# 062.2901	-	-		101.1	21.29	1	55.35	

TRHOW PILLOWS SOLD SEPARATELY