CABO

by Valerio Sommella & Simone Bonanni

DINING ARMCHAIR

0652.101

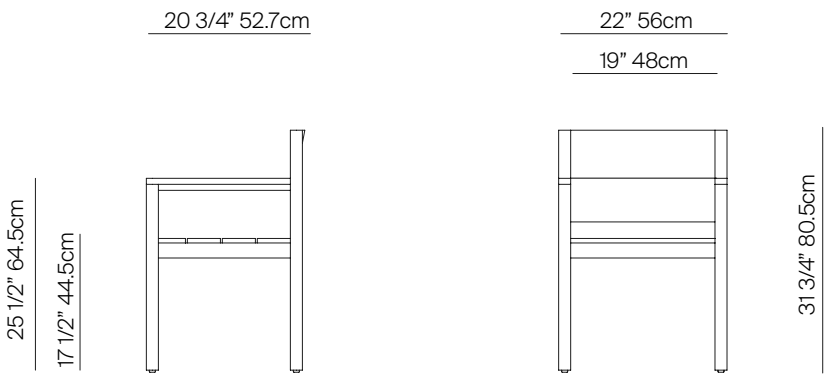

SPECIFICATIONS

Width:	22"	56 cm
Depth:	20 3/4"	52.7 cm
Height:	31 3/4"	80.5 cm
Seat height:	17 1/2"	44.5 cm

FINISHES

NATURAL
-20

TEAK

MATERIALS

Frame: Premium grade teak wood.

Furniture cover available.

TRHOW PILLOWS SOLD SEPARATELY

DANAO

danaoliving.com

CABO by Valerio Sommella & Simone Bonanni

DINING ARMCHAIR

0652.101

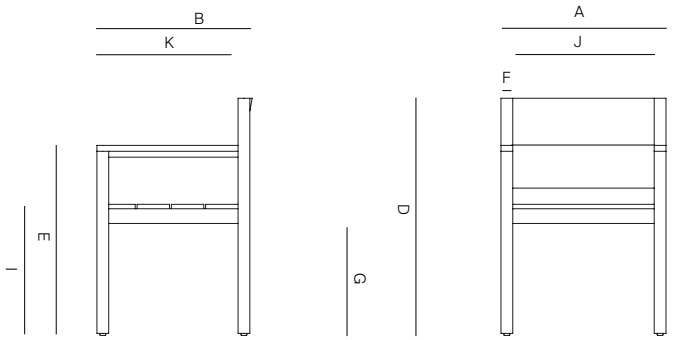

MEASURES INCH CM	OVERALL WIDTH	OVERALL DEPTH	OVERALL HEIGHT WITH CUSHIONS	OVERALL FRAME HEIGHT	ARM HEIGHT	ARM WIDTH	FOOT HEIGHT	SEAT HEIGHT WITH CUSHIONS	FRAME SEAT HEIGHT (FLOOR TO FRAME)	INSIDE SEAT WIDTH	INSIDE SEAT DEPTH
DESCRIPTION	A	B	C	D	E	F	G	H	I	J	K
DINING ARMCHAIR	22	20 3/4	-	31 3/4	25 1/2	1 1/2	15	-	17 1/2	19	18 3/4
SKU# 0652.101	56	52.7	-	80.5	64.5	4	38	-	44.5	48	47.9

MEASURES INCH CM	# OF BACK CUSHIONS	# OF SEAT CUSHIONS	COM YARDS METERS	DIAGONAL CLEARANCE	FURNITURE WEIGHT LBS KGS	TOTAL PIECES IN A BOX	BOXED WEIGHT LBS KGS	CUBE
DESCRIPTION				L				
DINING ARMCHAIR	-	-	-	32 1/2	41.45	1	51.37	11.43
SKU# 0652.101	-	-		82.2	18.8	1	23.3	

TRHOW PILLOWS SOLD SEPARATELY

DANAO

danaoliving.com